Journal Homepage: - www.journalijar.com
INTERNATIONAL JOURNAL OF ADVANCED RESEARCH (IJAR)
ISSN NO. 2320-5407
Article DOI: 10.21474/IJAR01
DOI URL: http://dx.doi.org/10.21474/IJAR01

RESEARCH ARTICLE

National Conference on Innovation in Science, Engineering and Management (NCISEM-2022)
Date of Conference 11-12 March 2022

TOWARDS 4.0 SMART FARMING- AUTOMATED IRRIGATION SYSTEM USING THE PHOTOVOLTAIC ENERGY

Anjali Pise[1] and Dr. Amit Thakare[2]
1. Research Scholar, Department of Computer Science and Engineering, Bdce Sevagram,Wardha.
2. Head of Department, Department of Computer Science and Engineering, Bdce Sevagram,Wardha.

Manuscript Info

Key words:-
Automated Irrigation System, Agri-Tech, Agricultural System

Abstract

As a part of a recent campaign, the agricultural zone has emerged as automatic in India. High-yielding agriculture comes on to be operable, amid 2021-2025, intents, to lead the way and escalate the development of the agricultural mastering with IoT, machine learning, and block-chain.Access to mandatory data at the right moment and the transformation of innovative services are the keys to profitability. The automatic irrigation system enhances growing conditions, saves time and water, and is especially useful in draught-prone areas. Agriculture is the largest economic and industrial sector. India is the second-colossal sustenance manufacturer with inside the world. Production and consumption of agricultural essential commodities plants, crops, and other basic needs have a diverse geographical distribution. It belongs to the climate and corresponding styles of vegetation. The commercial system of a country stimulate by agricultural production.

Copy Right, IJAR, 2022,. All rights reserved.

Introduction:-

Here-and-now, we are livelihood in a world of digital metamorphosis where there is more IoT connected bias than humans. The internet of things numerous changes or business operations, artificial growth, healthcare architecture, and global environmental and eleemosynary issues.The IoT has the potential to be boundless. Innovation makes a difference in us working faster, living the present day, and gaining general control over our lives. The most reason for the internet is to supply real-time information. It makes a difference to robotize the method it spares vitality, cash, and time on the workforce. The horticulture segment is developing space for IoT. Agriculturists can make the make the correct choice based on real-time information amid the whole cycle of crops and generation. Farmers give nourishment to the whole world inside the developing populace creates an expensive sum of nourishment. Crops are the foremost critical component in horticulture. Seeds of plants are known as large -scale preparations for nourishment generation. Within the preparation of nourishment, generation ranges, standard generation, appropriate administration, and appropriate dissemination.

Corresponding Author:- Anjali Pise
Address**:-** Research Scholar, Department of Computer Science and Engineering, Bdce Sevagram,Wardha.

Irrigation and Its importance

Soil and water sector units are foremost required and elementary variables of the farming area.Soil needs water to sort out for crop creation. There region unit 2 yields in Asian country Kharif harvests and Rabi crops. A few yields sow in blustery seasons and few harvests sow in colder time of year season. A few harvests sow in blustery seasons a few yield sow in the colder season. Soil needs water to sort out for crop creation. There region unit 2 yields in Asian country Kharif harvests and Rabi crops. A few harvests sow in blustery seasons a few yield sow in the colder season. A few harvests sow in stormy seasons and a few yields sow in colder time-of-year seasons. Kharif, the crop season is June to September. Paddy, maize, and soybean require dampness and a lot of water. Cold weather months November to February are wheat, mustard, grams are rabi crops; however, a few yields fill up in summer seasons are perishables and pulses from water irrigation systems. The definition of irrigation is the artificial application of water to the soil or agriculture field It is the replacement or supplementation of rainwater with another source of water. It is applied in dry -zones and amid duration of missing precipitation. Water is necessary, for each existing organism. Water performs a totally essential function in plant bodies. It helps to transportation of nutrients from the xylem to the phloem. It is helpful to the growth of plants. the moist soil means a continuous supply of water. The water always helps in germination so farmers always sow the seeds before the rainfall seasons Rainfall is falling insufficient amount of plants requirements then the farmers provide irrigation. This method is helpful to supply water to crops. The main idea behind the irrigation system is to assist in the growth of agricultural crops and plants by maintaining the minimum amount of water required to suppress used growth in grain fields preventing soil consolidation.

Solar Energy

There is no way to generate or destroy energy. Energy is the ability of an object to do some work. Solar energy is the fastest-growing power supply source across the world. It is a renewable source of energy. This technology is also creating a boom in the market. When solar energy convert's into electrical energy is called solar power. Solar energy is the main form of energy. The solar panels also help plants grow more efficiently by needing less water. It's also carbon-free, as solar panels create power without emitting harmful pollutants.

Types of Soil

Each soil has its specific properties,it compose of various minerals,air,organic matter. According to the Indian Council of Agriculture there are different types of soils present in India.As per the pattern of soil decided the moisture level of soil,its productivity rate,crop growth etc.

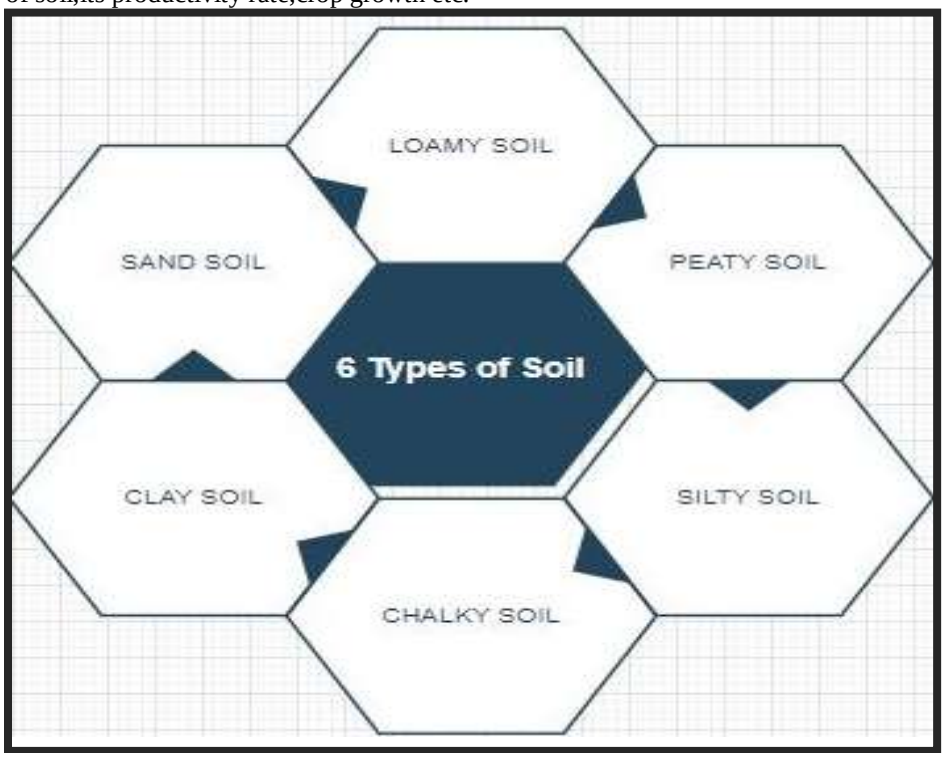

Fig.1:- Types of soils.

Related Work

There are multiple challenges in the agriculture sector. Some problems are related to crop failure, crop burning, crop diseases, yield production, increase salt concentration levels, etc. For reducing these problems related to the agricultural field. Multiple researchers take the initiative for reducing this kind of problem-related to the agricultural field. Every researcher has done some work related to the irrigation system, solar panels working system, crop production, etc.

This paper, proposed an irrigation system for agriculture using raspberry pi. In this system, the raspberry pi system communicates with devices and collects the data from the sensor and irrigates the plants as well as detects the moisture level and soil quality. A.Arual Anitha et.al proposed a hybrid method for smart irrigation. According the weather and climate details is used hybrid method. Sensor data is stored in the think speak cloud. It is controlled from anywhere whether the sensor or soil moisture sensor sends the data to the node MCU. Aman et.al proposed a smart irrigation system using IoT: SIS. In this approach used ATMEGA 328P microcontroller is used through HTTP protocol.[3]The proposed system the application of ion-sensitive field-effect transistor-based sensors to the soil. In this proposed system ion-selective field-effect transistor and the potential metric sensor is used and it collects the nutrients from the soil.[10]In this system proposed a cloud-based IoT for the smart garden watering system using Arduino Uno which is used to monitor the soil moisture and send the data to the thing-speak IoT cloud.[4]Yuthika et.al proposed an intelligent IoTbased irrigation system. A machine-learning algorithm was used in this approach. This prototype model was developed to test its efficiency. The security and water source issues were ignored in the IoT work.

Method and Material:-

For an automated solar powered irrigation system the research has to be done in some following ways.In this methodology , there are focus some following steps are follows

Choice of approach –

Detail study about farmer facing challenges and their different circumstances.

Data collection -

Collect the farmers related different data from various locations, departments and interviews through questionnaire.

Data Analysis -

Based on survey of 20 farmers in 5 villages- Kaji Karanji, Takli,Selu,Alodi.Survey based on questionnaire among 20 farmers. The questionnaire some questions are as follows.

Questionnaire

1.Which are the government policies or schemes help you more?
2.How much the technological knowledge is important for you?
3. Is it beneficial to load your material directly to the market like reliance?
4. Are you aware about new upcoming global farming technique like Israel?
5. Why are you afraid about adapting a new technique in the field?
6.How much awareness is important for you? Etc.

Table. 1:- Research Steps from table to field.

Steps of research	**Activities of data collection & analysis(Duration of 3 months,(November 2021- January 2022)**
Step 1	**Exploration, Agriculture departments.**
Step 2	**Study of DRO's-Divisions of Maharastra-Wardha, Nagpur, Gondia, Nashik, Pune, Ahmadabad, Satara**
Step 3	**Discuss with Experts, laws of agriculture with a lawyer, IITM-K, Agriculture engineers, officers, NGO, research foundation, Bio-scientist in Nashik.**
Step 4	**Study of SRO's**
Step 5	**Discuss with Guide**
Step 6	**Explore survey on 20 farmers with questionnaire for the ground reports analysis from**

	different locations.

Components used for automated solar powered irrigation system.

Sr.No	Components	Quantity
1	Node MCUESP 8266	2
2	Relay	1
3	Soil moisture sensor	1
4	Jumper cables	24
5	Battery 2000MAh	2
6	Solar panels 5 Watt	2
7	Solar charger Module	2
8	Breadboards	2

In this proposed system there are all components are use for implement an automated solar power irrigation system.

System Architecture of Proposed Work

This System architecture workflows are as follows

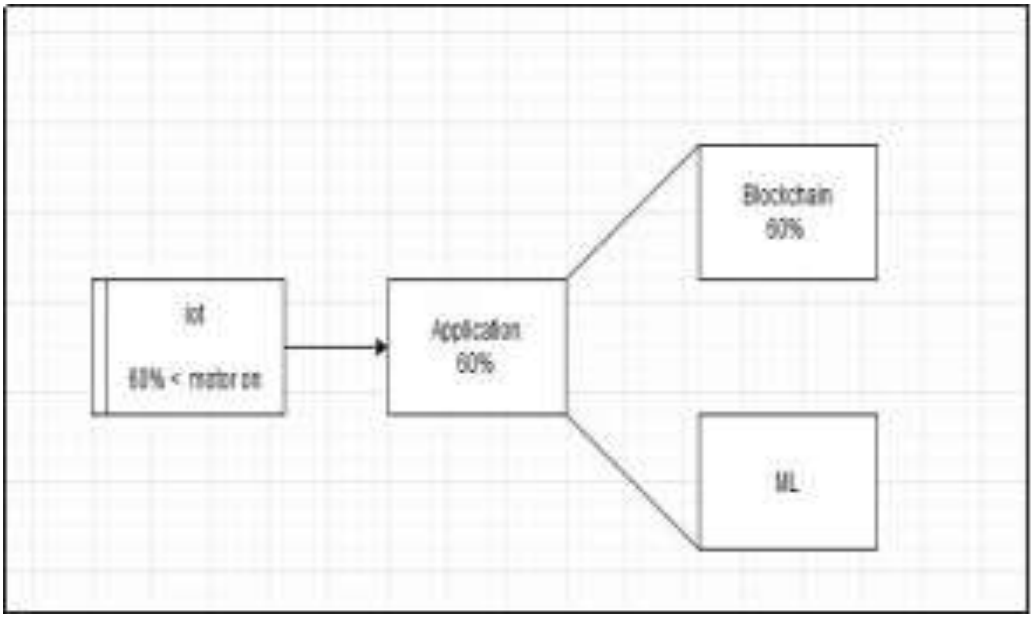

Fig.2:- System Architecture.

When the IoT device i.e soil moisture sensor jabs in the soil then this sensor sent the data of soil moisture level as per the type of plants and its stage levels requirements to the application.

Example 1 . Approximate values of seasonal crop water needs

Sr.no	Crop	Crop Water need(mm/total growing period)
1	Soyabean	450 - 700
2.	Banana	1200 - 2200
3.	Sugarcane	1500-2500
4.	Rice (Paddy)	450-700
5.	Bean	300 - 500
6.	Pea	350 -500

In this system, the application has full authority to access, modify and store the data and this data-set is permanently stored in the blockchain for highly secured and maintain transparency between the user

Proposed Work

This proposed system is an automated irrigation system. This irrigation system works on photovoltaic energy. The SPIS(solar powered irrigation system) is transparent technology prefer for irrigation system. It gives large amount

of benefits to the environments as well as an agriculturist..It permits the use of solar energy for water irrigation system. It include soil moisture sensor, node MCU, LED, solar panels ,transistors, batteries and water pump. when the soil moisture sensor jab in the soil, it measure the water content in the soil.As per the plants requirements of water the water transfer from source to destination i.e the water pump flows the water towards the plants based on the communication messages between client and server.Security plays a very vital role in any established communication. This system, is secured by WPA2 protocol. It uses the advanced encryption standard for the higher security to the communication device.

Fig.3:- Experimental Setup.

Modules

In this proposed work there are 2 modules are used Server and client.

Server

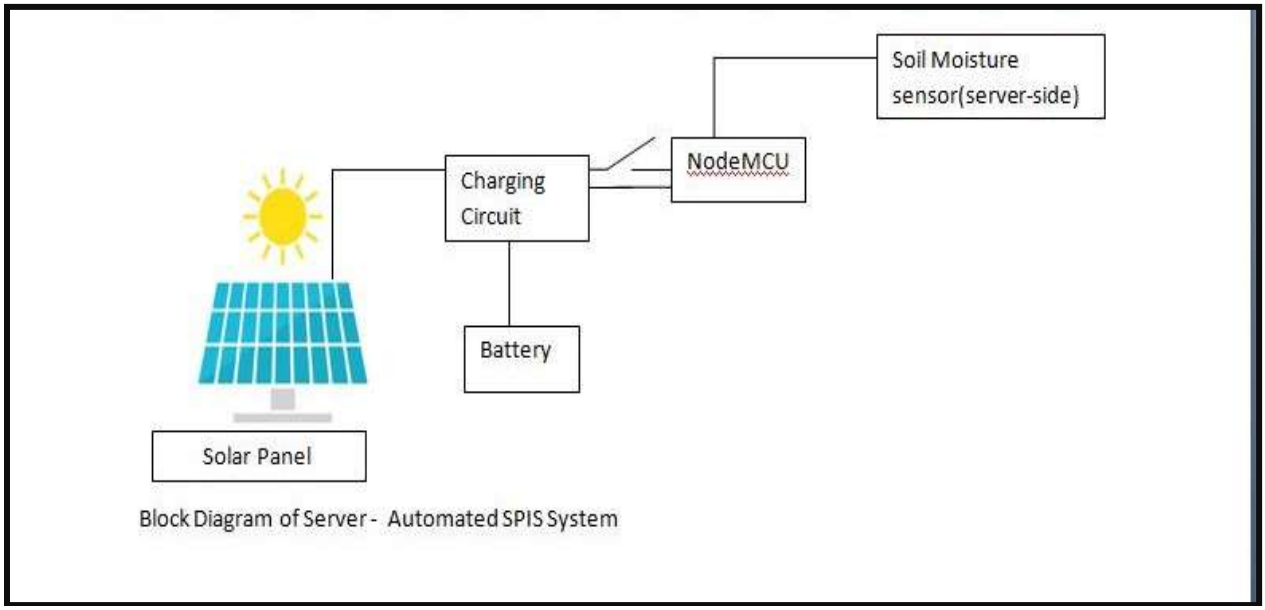

Fig.4:- Block diagram of module server.

When the server creates its network via it will indicate by blue light LED and searches for clients until Led of blue color blink for searching its pairing with its clients. Every client (module2) connects to the server and pairs with its connection the blue led continuously glows. It is the sign of communication established between both for performing operations the user needs power supply this power supply provides from batteries. when the power supply is on it indicate by a green LED.

Table 2:- LED & Its output of server.

Sr.no	LED	OUTPUT	PIN
1	RED GLOW	Device not inserted	D3
2	GREEN GLOW	Power on	Battery switch
3	BLUE BLINK	Searching for clients	D2
4	BLUE GLOW	Connected	D2

The whole operation process indicate by LED lighting. It is easy to understand to the farmer without using LCD display.

Step1 - The soil moisture sensor will give the details of the moisture level of soil information to node MCU (server)whether water is needed for the crop or not.

Step2- The soil moisture sensor will give the details of moisture levels of soil information with some conditions are as follows.When the following conditions are satisfied then the server done its operation perfectly

Condition 1 - When the soil moisture sensor will not jab into the soil, it will indicate by red LED(glow) that mean the message is "Device is not inserted".**Condition 2-** If a soil sensor is a jab into the soil and moisture level of the soil is enough amount of plants type and as per its stages water requirement is fulfill that means"Soil is in good condition".**Condition-3** When the soil will dry, the message sent to the client is "soil needs water".Then the operation performs as per the instruction which is given by the sensor.

Client

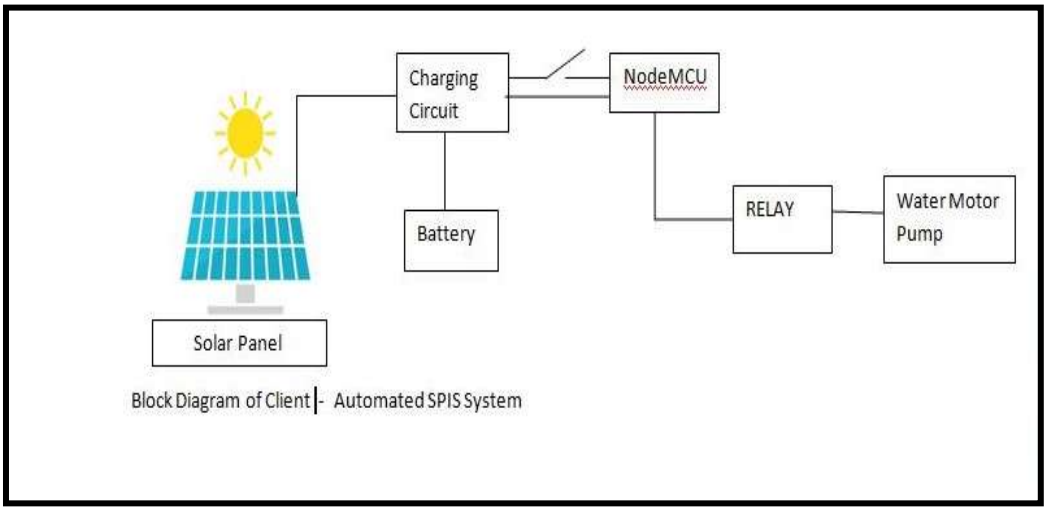

Fig.4.1:- Block diagram of Client module.

Client working procedure-Like a server, the client is also searching for pairing with the created network if both modules are connected successfully in this process the blue LED blinks which means searching the other device for the pairing. When the client will find the network then the pairing is successfully connected, it indicates through blue Led. The blue LED constantly glows which means the connection establish properly. After the communication establishment client receive the response from the server in 3 ways

Message1- Device is not jab/inserted.
Message2- Soil is good /moist
Message3- Soil needs water.

The client will check the messages continuously each 1 second .
When the message receives from the server to the client are as follows
Step1 - If the device is not inserted it will indicate through a red LED.
Step2 - If the soil moisture is enough will enough it means soil is good.
Step3 - If the soil will dry then the client accepts the response and turns on the motor.

Table 3:- LED & Its output of server.

Sr.no	LED	OUTPUT	PIN
1	RED GLOW	Device not inserted	D3
2	GREEN GLOW	Power on	Battery switch
3	BLUE BLINK	Searching for server	D2
4	BLUE GLOW	Connected	D2

This process is continuously running and the client continuously checks the server without any failure because in this working procedure solar panel plays a very important role. The whole process of these 2 modules is done through solar renewable energy via solar panels. Solar panel charges the 2 batteries This whole operation will perform without human intervention.

Flowchart of Proposed system

When the server communicates with client for performing operation on the basis of messages, If it checks the client is connects with the node MCU wifi network and soil moisture sensor collect the data for transfer this data between the server and client. If the condition is satisfies then send the signal for further performing operation on the basis of input and output. The motor pump will be turn on.

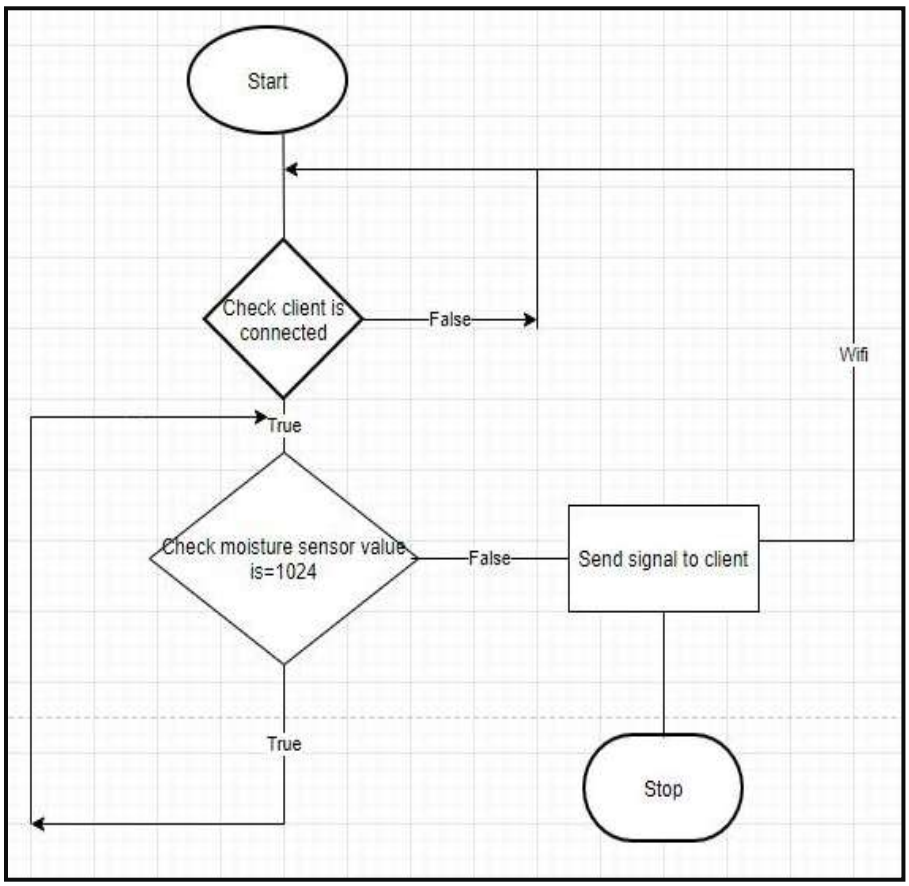

Fig.5:- Server Module flowchart.

Flowchart of Client

The client checks the server is connected with the wifi network for communication and perform its operation .If the the server is connected successfully with the client network then its checks coming the inputs related to the soil moisture level and on the basis of inputs irrigation system will be on and off .The client continuously check the server .Then this process is repeated.

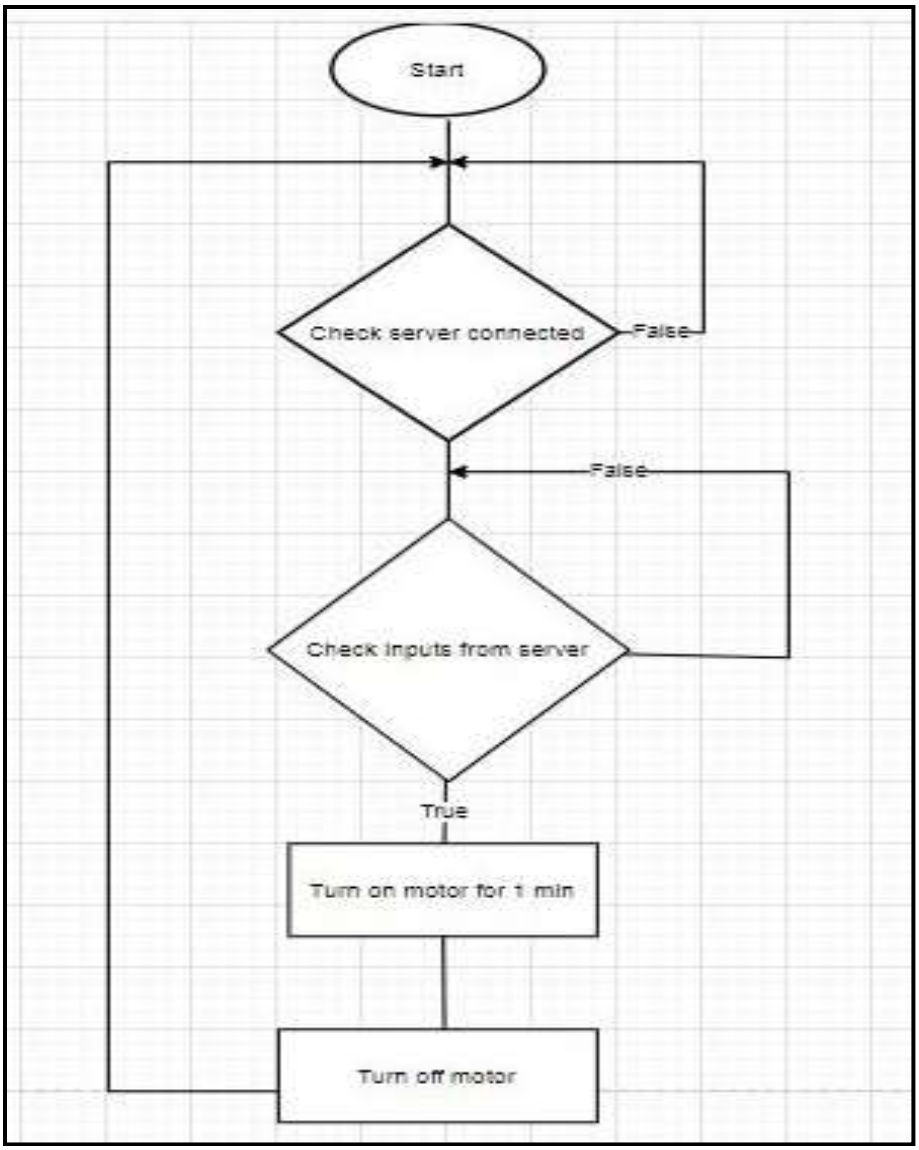

Fig.5.1:- Client Module flowchart.

Data analysis

When the soil moisture is jab into the soil, the sensor collects the information of moisture level then collected information sent to the server via nodeMCU. The messages will transfer between the client and server through the established network. The whole operation performs based on the message passing between server and client with the help of photovoltaic cells. The whole process of an automated solar power irrigation system will establish through photovoltaic cells i.e solar panels.

Conclusion and Future scope:-

Agricultural field monitoring plays a very vital role for any farmer. Then this farm field monitoring becomes smart field monitoring when it is connected with IoT devices. It is quite helpful. Irrigation is responsible for crop production when irrigation becomes automatic is quite useful for the farmer because it allows controlling the amount of water that will be transferred to the plant as per the requirement. When this smart irrigation is possible without electricity through the use of UV rays for generates electricity. It is eco-friendly, saves man-made large amounts of electricity, fossil fuel, money, prestigious time, and reduces manpower. This whole process is continuously in the progressive state without human intervention. so it increases the crop productivity and financial condition enhance of the farmer. The challenge will be in front of the researchers to provide technological knowledge for those who are

completely non-technical.Solar energy and the internet of things are the powerhouses of energy and technology when it integrates with multiple technologies it produces a large number of benefits among us like essential nutrients balanced in the soil, predicts the productivity rate of crops, crop yield prediction, multiple benefits are produced from the soil with the adaptation of new technology. By using technology, it is possible to produce a large amount of money from the mud. It will be very helpful in empowering the nation in a new direction.

References:-

[1] Yun Xu (April 2015) IEEE , "Recent Machine learning Applications to Internet of Things".
[2] Nallapaneni Manoj Kumar ,Pradeep Kumar Mallick, (2018) Elsevier"Blockchain technology for security issues and Challenges", International Conference On Computational Intelligence and Data Science.
[3] Chandhini .K.(January 2016) " A Literature Study on Agricultural Production system Using IoT as Inclusive Technology", International Journal Of Innovative Technology and Research.
[4] G. Sambasivam, Geoffrey Duncan Opiyo (2020) IEEE "A predictive machine learning application in agriculture: Cassava disease detection and classification with imbalanced dataset using convolutional neural networks",Egyptian Informatics Journal.
[5] Fran Casino, Thomas K. Dasaklis,Constantinos Patsakis , Elsevier (2019), "A Systematic literature review of blockchain-based applications: Current status", Telematics and Informatics.
[6] Jitin Jagannath,Nicholas Polosky,Anu Jagannath,Francesco Restuccia and Tommaso Melodia , (July2021) IEEE "Machine Learning for wireless Communications in the Internet of Things: A Comprehensive Survey".Ad Hoc Networks.
[7] Shaik Vaseem Akram,Praveen Kumar Malik,Rajesh Singh Anita Sudeep Tanwar, IEEE, (June 2019) "Adoption of blockchain Technology in various Realms: Opportunities and Challenges".
[8] Omar Said,Masud(2013) , "Towards Internet of things: Survey and Future Vision",International Journal of computer networks(IJCN),Volume 5.issue(1):2013.
[9] Fatima Hussein,Rashid Hussain,Sayed ali Hassan and Ekram Hossain(2018),"Machine Learning in IoT security: Current Solutions and Future Challenges",International journal of Computer Network.
[10]J.Artigas, A. Beltran, C.Jimenez , A. Baldi, R. Mas C. Dominguez,J.Alonso(2001) Elsevier, "Application of ion sensitive field effect transistor based sensors to soil analysis", Computers and electronics in agriculture.
[11] Sabir Hussain Awan, Sheeraz Ahmed,Sozan Sulaiman Maghdid,Khalid Zaman,M.Yousaf Ali Khan,Zeeshan Najam, Sohail Imran (2020) , "Blockchain with IoT, an emergent Routing Scheme for smart Agriculture" International Journal of Advanced Computer Science and Application, Vol. 11, No. 4.
[12] David Christin Rose and Jason Chilvers,"Agriculture 4.0:Broadening Responsible Innovation in an Era of smart farming",(2018)frontiers in sustainable food systems.
[13]Harikumar Pallathadka, Malik Mustafa, Domenic T. Sanchez, Guna Sekhar Sajja, Sanjeev Gour, Mohd Naved(2020) Elsevier, "Impact Of machine learning on Management, healthcare and agriculture.
[14] Sudeep Tanwar,Quasim Wai- Chnag Hong(Senior member of IEEE) e.tl "machine learning adoptation in blockchain based smart application:: challenges and the way forward " IEEE (2020).
[15] Roy A.Islam W,Hasan SM,et.al,"Propects of of Solar pumping in the northern area of Bangaladesh(2005)American Journal of Renewable and sustainable Energy.
[16] Shah T,Durga N,Verma S et.al,"Solar Power as Remunerative Crop,Water Policy Research Highlight"(2016)
[17] VC Sontake,Kalamkar,"Solar photovoltaic water pumping system"(2016)
[18] Woltering L,Pasternak"The Afican market garden: The development of low- pressure drip irrigartion system for smallholders in the sunado sahel"
[19]Compana A,Rap,Li,et.al,"Economic Optimisation of photovoltatic water pumping system for irrigation."(2015)
[20] Food and Agriculture Organization of the United Nations(FAO)2017.
[21] F.Servida and E.Casey,"IoT forensic challenges and opportunities for digital traces",Digit.Invest.vol.28.pp.S22-S29.Apr.2019.
[22] E.Casey,The chequered past and risky future of digital forensics,"Aust.j.Forensics Sci vol51,no.6.pp.649-664,2019.
[23] F.Al-Turjman and A.Malekloo,"Smart parking in IoT-enabled cities:A survey",Sustain Cities Soc.vol.49,May 2019,Art no.101608.
[24] H.Chi,T.Aderibigbe,andB.C..Granville,"A framework for IoT data acquisition and forensics analysis,"in proc.IEEE int.Conf.Big Data,2019,pp.5142-5146.
[25] M.M.Losavio,K.P..Chow,A.Koltay,and J.James,"The Internet of things and the smart city:Legal challenges with digital forensics,privacy and security",Security Privacy,vol.1,no.3,p.e23,2018.

[26] W.Ejaz and A.Anpalagan,BlockchainTechnology for security and privacy in internet of things.Cham,Switzerland:Springer,2019,pp.47-55.
[27] O.Yakubu,O.Adjei, and N.Babu,A review of prospects and challenges of Internet of Things",Int.J.Comput.Appl,vol.139,no.10,pp.33-39,2016.
[28] S.O Shaughnessy and A.Keane,"Impact of cloud computing on digital forensic investigations",in proc.IFIP Adv.Inf.Commun.Technol.,vol.410,2013,pp.291-303.
[29] E.Oriwoh and G.Williams,"Internet of Things:The arguments for smart forensics",in Handbook of Research on digital crime,vol.42.Hershey,PA,USA:IGI Glob.2014,pp,pp.1-8.
[30] J.Deogirikar and A.Vidhate,"Security attacks in IoT: A survey",in Proc.Int.Conf.IoT Soc.Mobile Anal.Cloud(1-SMAC),2017,pp.32-37.